STRATA PLAN OF PART OF LOT A, SECTION 3, RANGE 3 EAST, NORTH SALT SPRING ISLAND, COWICHAN DISTRICT, PLAN VIP59981.

CAPITAL ASSESSMENT AUTHORITY

B.C.G.S. 92B.083

Scale = 1:500

10 5 0 10 20

Metres

PHASE 1, SHEET 1 OF 5 SHEETS

STRATA PLAN VIS 5635

Deposited and registered in the Land Title Office at Victoria, B.C., this 29th day of September, 2004.

Deputy Registrar

This plan lies within the Capital Regional District.

EW130880

LEGEND

Bearings are astronomic, derived from Plan VIP59981.

- ● denotes standard iron post found.
- ○ denotes standard iron post placed.
- ◉ denotes non-standard round iron post found.
- S.L. denotes Strata Lot.
- (CP) denotes Common Property
- (LCP) denotes Limited Common Property

Unless otherwise indicated, bearings deflect by multiples of 45° from the given reference bearing.

All balconies and decks are defined as to height by the centre of the floor above or its extensions, or where there is no floor above, by the average height of the Strata Lot within the same building, unless otherwise indicated.

All distances are in metres unless otherwise noted.

I, Gerald W. Lindberg, a British Columbia land surveyor, certify that the building shown on this strata plan are within the external boundaries of the land that is the subject of the strata plan. Date: September 19, 2004.

Gerald W. Lindberg, B.C.L.S.

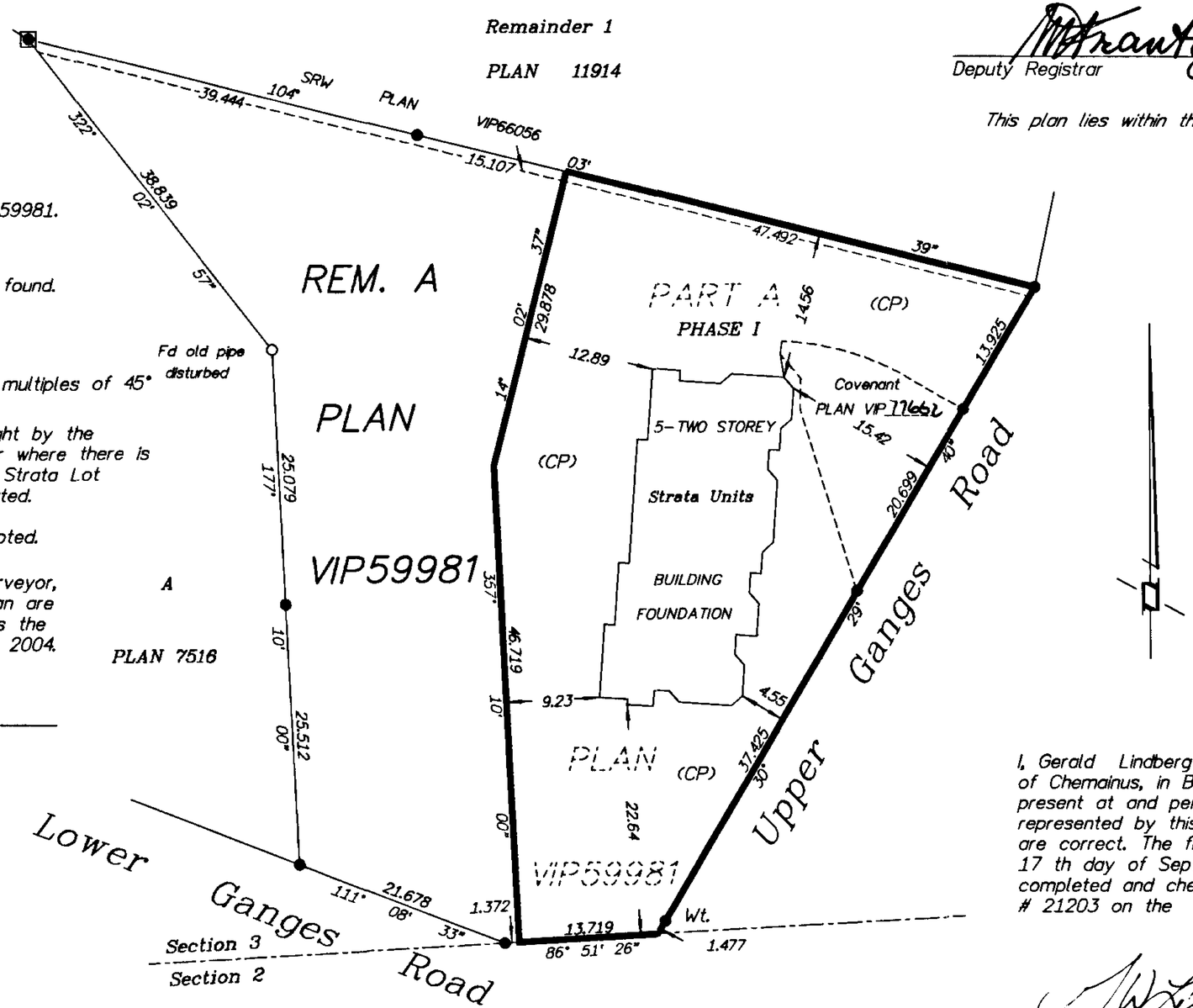

Civic Address:
115 Upper Ganges Road
Salt Spring Island , B.C.
V8K 2S2

I, Gerald Lindberg , a British Columbia Land Surveyor, of Chemainus, in British Columbia, certify that I was present at and personally superintended the survey represented by this plan, and that the survey and plan are correct. The field survey was completed on the 17 th day of Septemeber, 2004. The plan was completed and checked, and the checklist filed under # 21203 on the 19 th day of September, 2004.

Gerald W. Lindberg, B.C.L.S.

G.W. LINDBERG LAND SURVEYING INC.
Professional Land Surveyor
Surveying & Geomatics Services
9261 Chemainus Road
Chemainus, B.C. V0R 1K5 Tel. (250) 246-9393
Email gwlindberg@shaw.ca Fax (250) 246-9393

22939

File No. GWL03-168
Dwg: Phase 1-Sheet 1

BUILDING PERIMETER

Scale = 1:200

4 2 0 4 8 12 16 20
Metres

PHASE 1, SHEET 2 OF 5 SHEETS

STRATA PLAN VIS 5635

LEGEND

CP denotes Common Property
Unless otherwise indicated, bearings deflect multpiles of 45 ° from the given reference bearing.

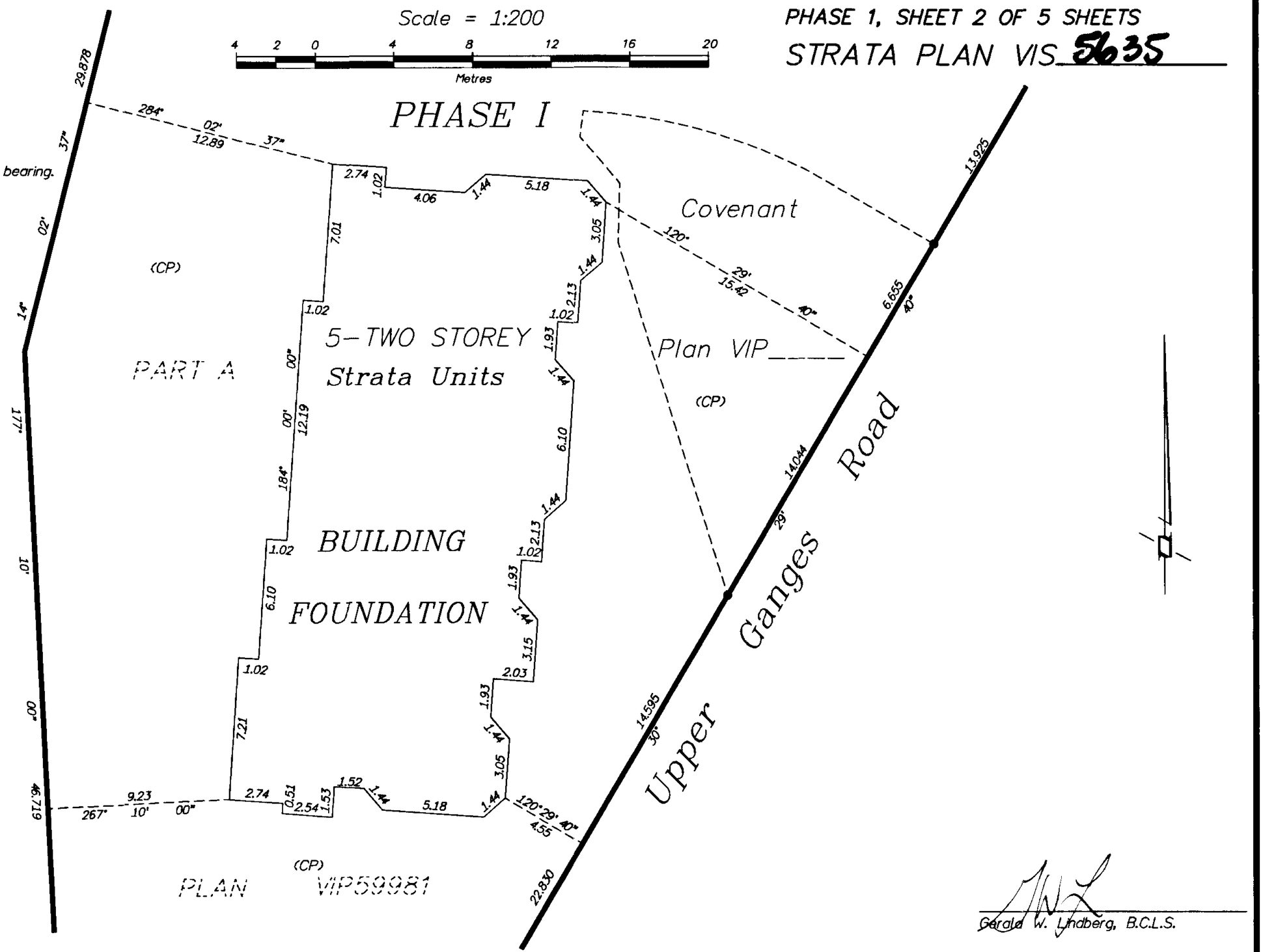

G.W. LINDBERG LAND SURVEYING INC.
Professional Land Surveyor
Surveying & Geomatics Services
9261 Chemainus Road
Chemainus, B.C. V0R 1K5 Tel. (250) 246-9393
Email gwlindberg@shaw.ca Fax (250) 246-9393

Gerald W. Lindberg, B.C.L.S.

September, 18, 2004.

22939

File No. GWL03-168
Dwg: Phase 1-Sheet 2

FORM S ENDORSEMENT OF NONOCCUPANCY

I, Gerald W. Lindberg, a British Columbia land surveyor, certify that the building included in this strata plan has not, as of September 12, 2004 been previously occupied.

Gerald W. Lindberg, B.C.L.S.

FORM Q ENDORSEMENT OF APPROVAL FOR PHASED STRATA PLAN

Approved as Phase 1 of a 3 Phase Strata Plan under Section 224 of the Strata Property Act .

Date : SEPT 23, 2004

Signature of Approving Officer
Ministry of Transportation

Registered Owners:

Springbay Developments Inc.
Inc. no. 569988

Authorized Signatory
(Print name here. Wayne Lee)

Authorized Signatory
(Print name here.....)

Witness as to both signatures
(Print name here. Dana Mann)

Legal Assistant
402-707 Port Street
Victoria, BC V8W 2T6
Occupation of Witness

Address of Witness

G.W. LINDBERG LAND SURVEYING INC.
Professional Land Surveyor
Surveying & Geomatics Services
9261 Chemainus Road
Chemainus, B.C. V0R 1K5 Tel. (250) 246-9393
Email gwlindberg@shaw.ca Fax (250) 246-9393

Gerald W. Lindberg, B.C.L.S.
September 12 2004.

22939

File No. GWL03-168
Dwg: Phase 1-Sheet 3

FIRST FLOOR LEVEL

Scale = 1:200

4 2 0 4 8 12 16 20

Metres

PHASE 1, SHEET 4 OF 5 SHEETS

STRATA PLAN VIS 5635

SL denotes Strata Lot.
CP denotes Common Property
LCP denotes Limited Common Property
ER denotes common property Electrical Room
All distances are in metres unless otherwise noted.

All balconies and decks are defined as to height by the centre of the floor above or its extensions, or where there is no floor above, by the average height of the Strata Lot within the same building, unless otherwise indicated.

PHASE I

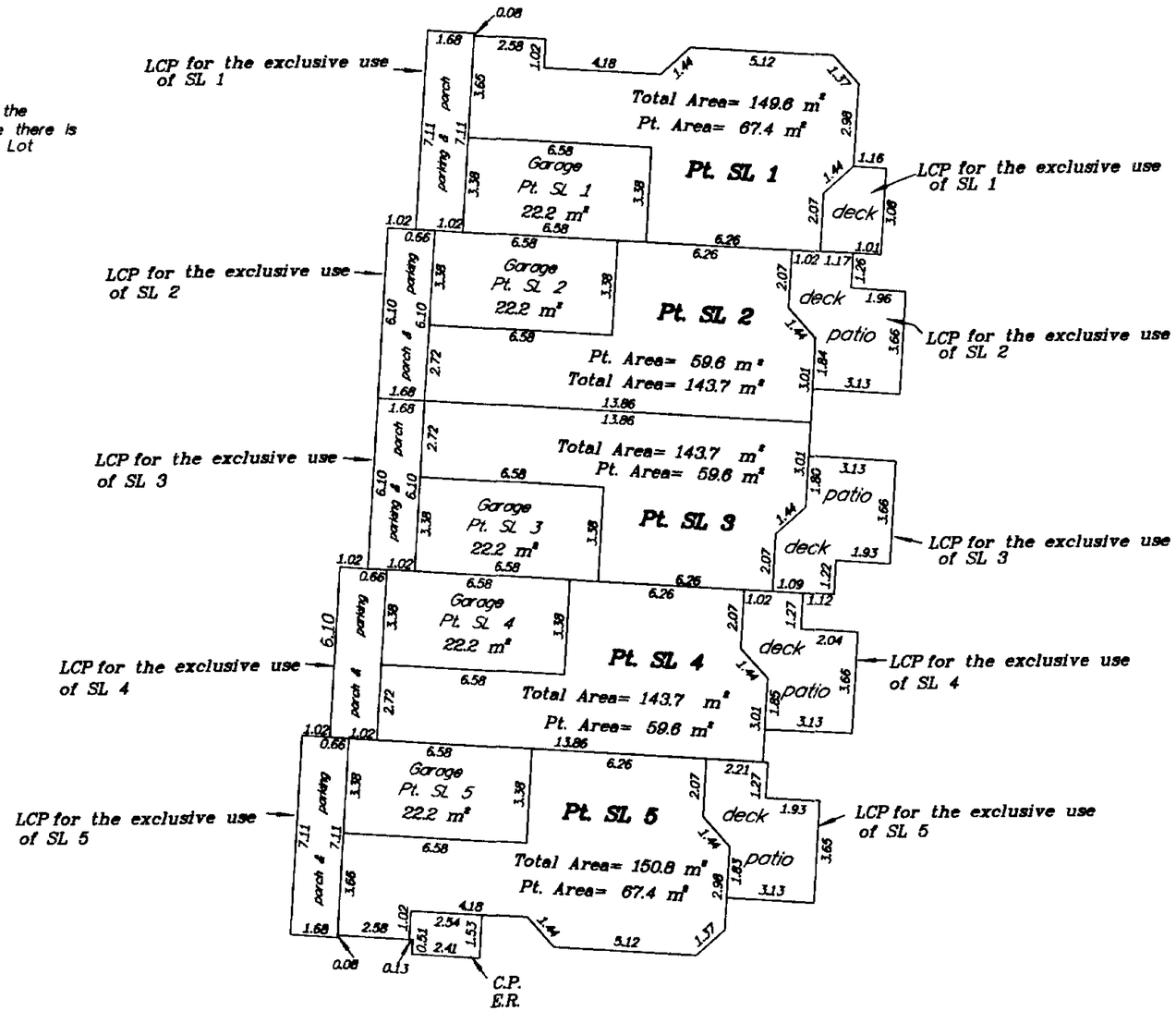

G.W. LINDBERG LAND SURVEYING INC.

Professional Land Surveyor
Surveying & Geomatics Services
9261 Chemainus Road
Chemainus, B.C. V0R 1K5 Tel. (250) 246-9393
Email gwlindberg@shaw.ca Fax (250) 246-9393

Gerald W. Lindberg, B.C.L.S.

September 19, 2004.

Original

File No. GWL03-168
Dwg: Phase 1-Sheet 4

22939

SECOND FLOOR LEVEL

Scale = 1:200

4 2 0 4 8 12 16 20

Metres

PHASE 1, SHEET 5 OF 5 SHEETS

STRATA PLAN VIS 5635

SL denotes Strata Lot.
CP denotes Common Property
LCP denotes Limited Common Property
ER denotes common property Electrical Room
All distances are in metres unless otherwise noted.

All balconies and decks are defined as to height by the centre of the floor above or its extensions, or where there is no floor above, by the average height of the Strata Lot within the same building, unless otherwise indicated.

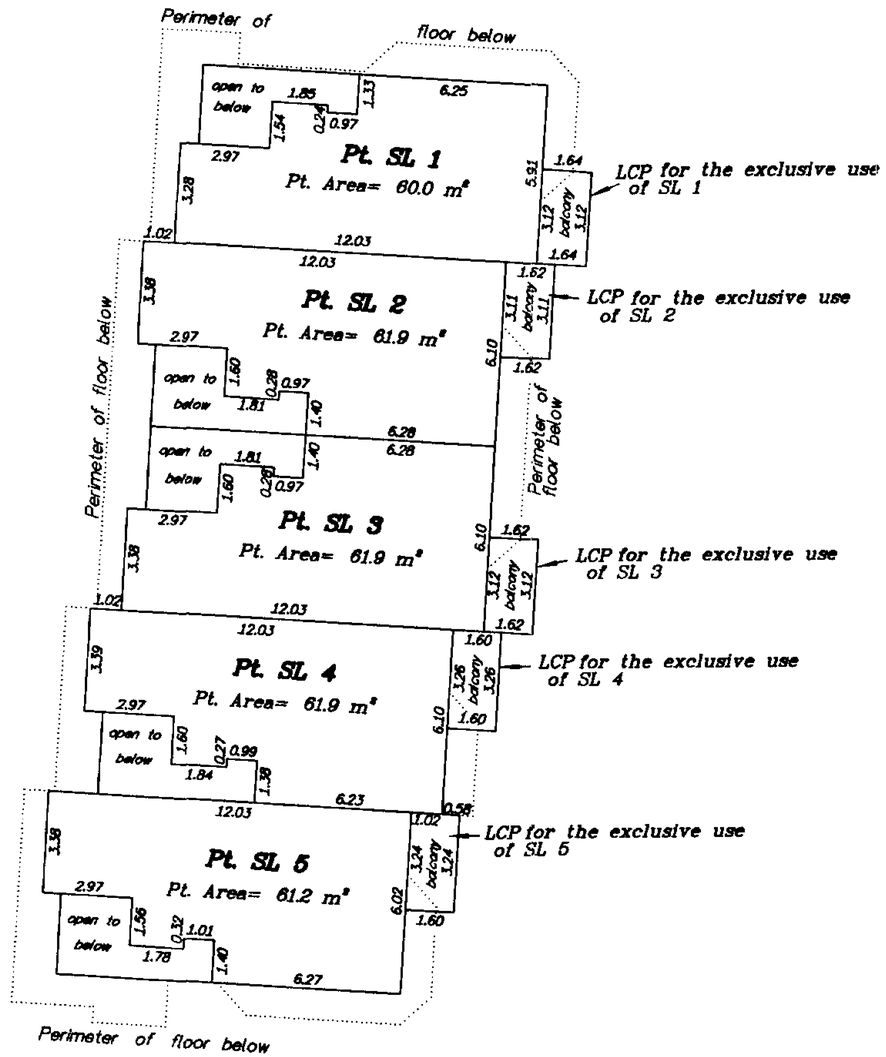

G.W. LINDBERG LAND SURVEYING INC.
Professional Land Surveyor
Surveying & Geomatics Services
9261 Chemainus Road
Chemainus, B.C. V0R 1K5 Tel. (250) 246-9393
Email gwlindberg@shaw.ca Fax (250) 246-9393

Gerald W. Lindberg, B.C.L.S.

September 19, 2004.

original

File No. GWL03-168
Dwg: Phase 1-Sheet 5

22939.

STRATA PLAN OF PART OF THE REMAINDER OF LOT A, SECTION 3, RANGE 3 EAST, NORTH SALT SPRING ISLAND, COWICHAN DISTRICT, PLAN VIP59981.

CAPITAL ASSESSMENT AUTHORITY

B.C.G.S. 92B.083

Scale = 1:500

10 5 0 10 20

Metres

PHASE 2, SHEET 1 OF 6 SHEETS

STRATA PLAN VIS5635

Deposited and registered in the Land Title Office at Victoria, B.C., this 8 day of July , 2005.

Deputy Registrar

EX 83199

This plan lies within the Capital Regional District.

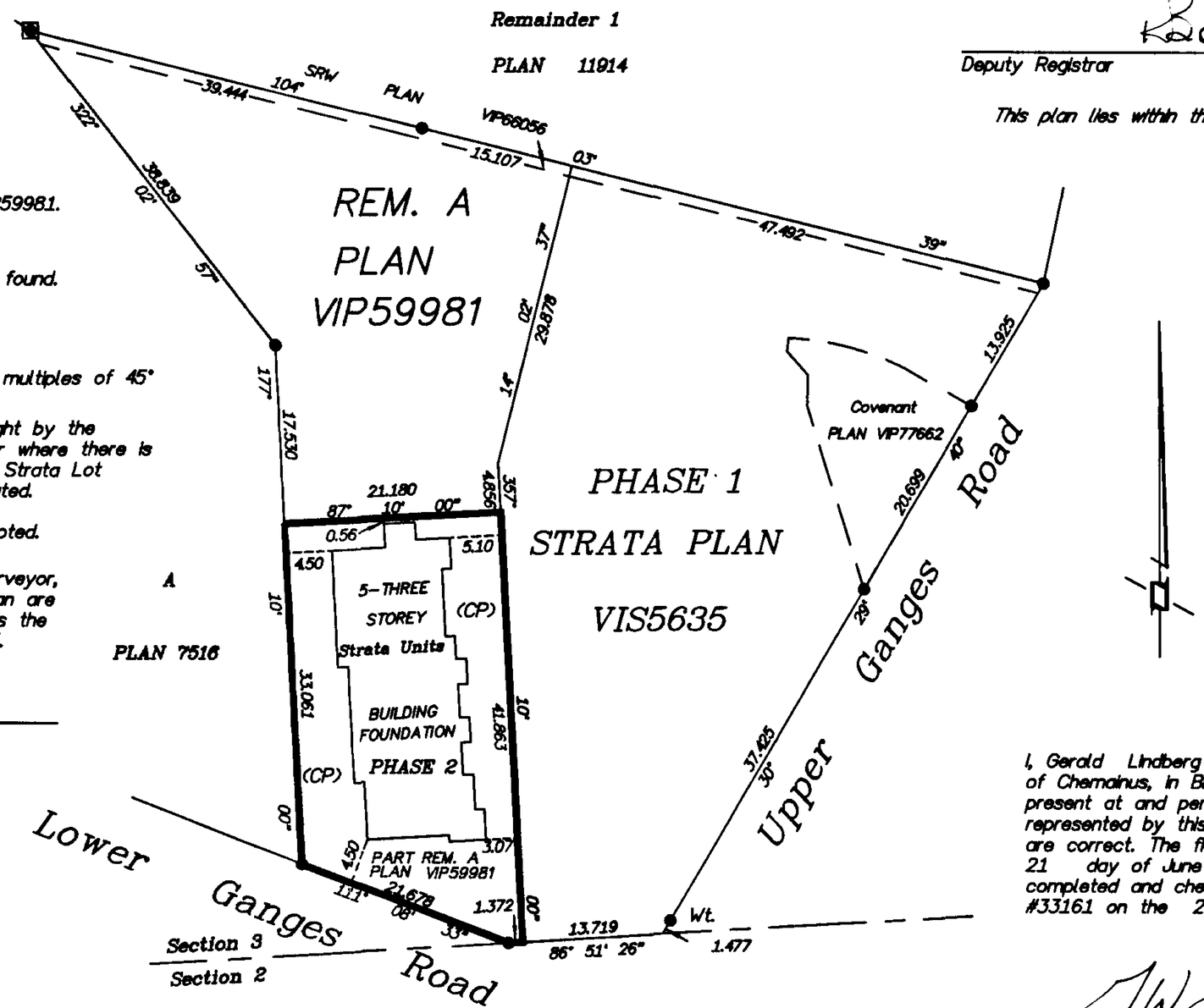

LEGEND

Bearings are astronomic, derived from Plan VIP59981.

● denotes standard iron post found.

▣ denotes non-standard round iron post found.

S.L. denotes Strata Lot.

(CP) denotes Common Property

(LCP) denotes Limited Common Property

Unless otherwise indicated, bearings deflect by multiples of 45° from the given reference bearing.

All balconies and decks are defined as to height by the centre of the floor above or its extensions, or where there is no floor above, by the average height of the Strata Lot within the same building, unless otherwise indicated.

All distances are in metres unless otherwise noted.

I, Gerald W. Lindberg, a British Columbia land surveyor, certify that the building shown on this strata plan are within the external boundaries of the land that is the subject of the strata plan. Date: June 22, 2005.

Gerald W. Lindberg, B.C.L.S.

Civic Address:
115 Upper Ganges Road
Salt Spring Island , B.C.
V8K 2S2

G.W. LINDBERG LAND SURVEYING INC.
Professional Land Surveyor
Surveying & Geomatics Services
9261 Chemainus Road
Chemainus, B.C. V0R 1K5 Tel. (250) 246-9393
Email gwlindberg@shaw.ca Fax (250) 246-9393

I, Gerald Lindberg , a British Columbia Land Surveyor, of Chemainus, in British Columbia, certify that I was present at and personally superintended the survey represented by this plan, and that the survey and plan are correct. The field survey was completed on the 21 day of June , 2005. The plan was completed and checked, and the checklist filed under #33161 on the 22 day of June , 2005.

Gerald W. Lindberg, B.C.L.S.

File No. GWL03-168
Dwg: Phase 2-Sheet 1

BUILDING PERIMETER

PHASE 2, SHEET 2 OF 6 SHEETS

STRATA PLAN VIS5635

Scale = 1:200

4 2 0 4 8 12 16 20

Metres

LEGEND

CP denotes Common Property
Unless otherwise indicated, bearings deflect multiples of 90 ° from the given reference bearing.

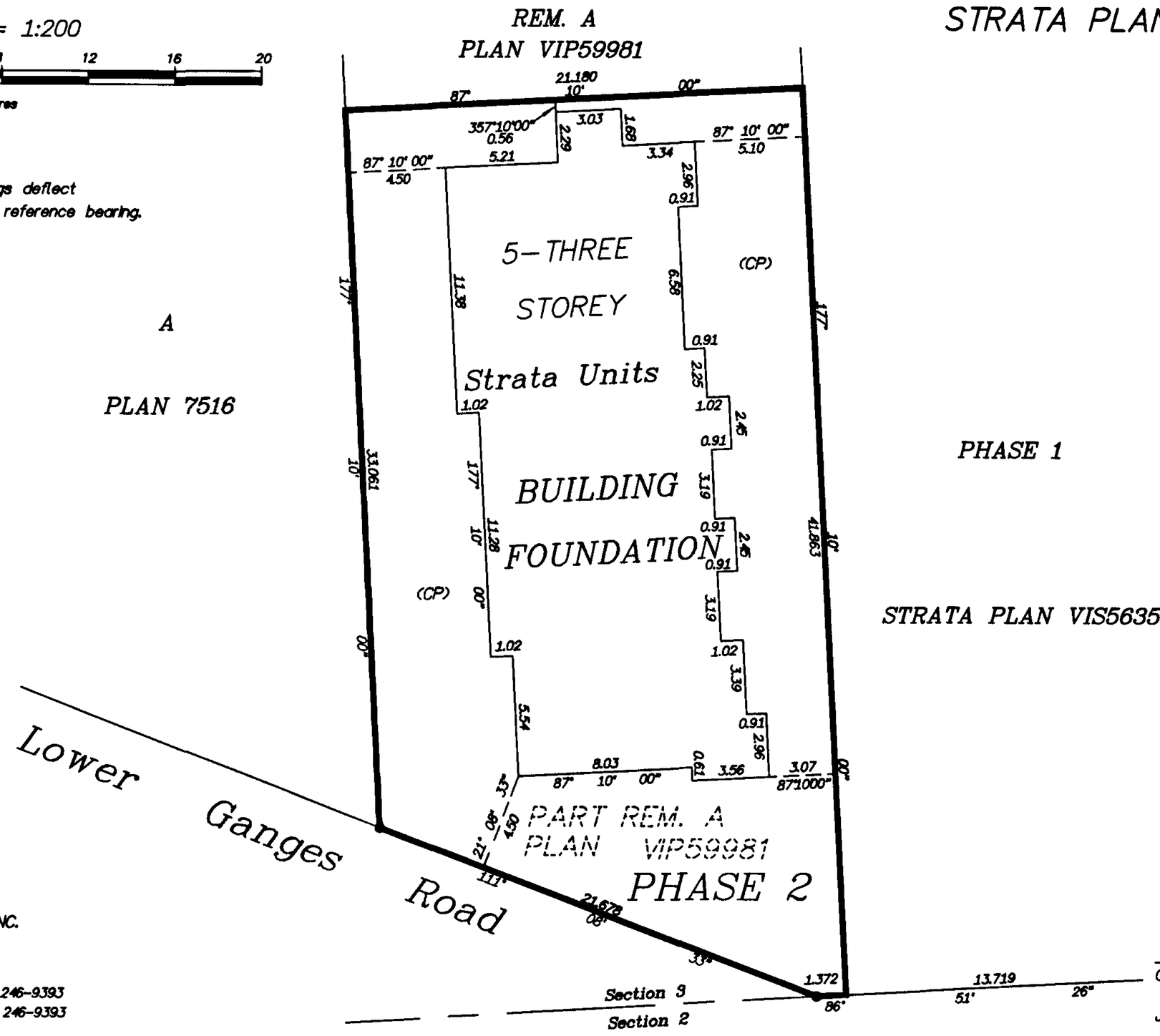

G.W. LINDBERG LAND SURVEYING INC.
Professional Land Surveyor
Surveying & Geomatics Services
9261 Chemainus Road
Chemainus, B.C. V0R 1K5 Tel. (250) 246-9393
Email gwlindberg@shaw.ca Fax (250) 246-9393

Gerald W. Lindberg, B.C.L.S.

June, 22, 2005.

File No. GWL03-168
Dwg: Phase 2-Sheet 2

STRATA PLAN VIS5635

FORM S ENDORSEMENT OF NONOCCUPANCY

I, Gerald W. Lindberg, a British Columbia land surveyor, certify that the building included in this strata plan has not, as of June 22, 2005 been previously occupied.

Gerald W. Lindberg, B.C.L.S.

FORM Q ENDORSEMENT OF APPROVAL FOR PHASED STRATA PLAN

Approved as Phase 2 of a 3 Phase Strata Plan under Section 224 of the Strata Property Act .

Date : July 7 2005

Signature of Approving Officer
Ministry of Transportation

Registered Owners:

Springbay Developments Inc.
Inc. no. 569988

Authorized Signatory
(Print name here WAYNE LEE)

Authorized Signatory
(Print name here)

Witness as to both signatures
(Print name here LAURA ADAMS)

SOLICITOR
Occupation of Witness

402-707 FORT ST. VICTORIA B.C.
Address of Witness

G.W. LINDBERG LAND SURVEYING INC.
Professional Land Surveyor
Surveying & Geomatics Services
9261 Chemainus Road
Chemainus, B.C. V0R 1K5 Tel. (250) 246-9393
Email gwlindberg@shaw.ca Fax (250) 246-9393

Gerald W. Lindberg, B.C.L.S.

June 22, 2005.

File No. GWL03-168
Dwg: Phase 2-Sheet 3

FIRST FLOOR LEVEL

PHASE 2, SHEET 4 OF 6 SHEETS

STRATA PLAN VIS5635

Scale = 1:200

4 2 0 4 8 12 16 20

Metres

SL denotes Strata Lot.
CP denotes Common Property
LCP denotes Limited Common Property
ER denotes common property Electrical Room
All distances are in metres unless otherwise noted.

All balconies and decks are defined as to height by the centre of the floor above or its extensions, or where there is no floor above, by the average height of the Strata Lot within the same building, unless otherwise indicated.

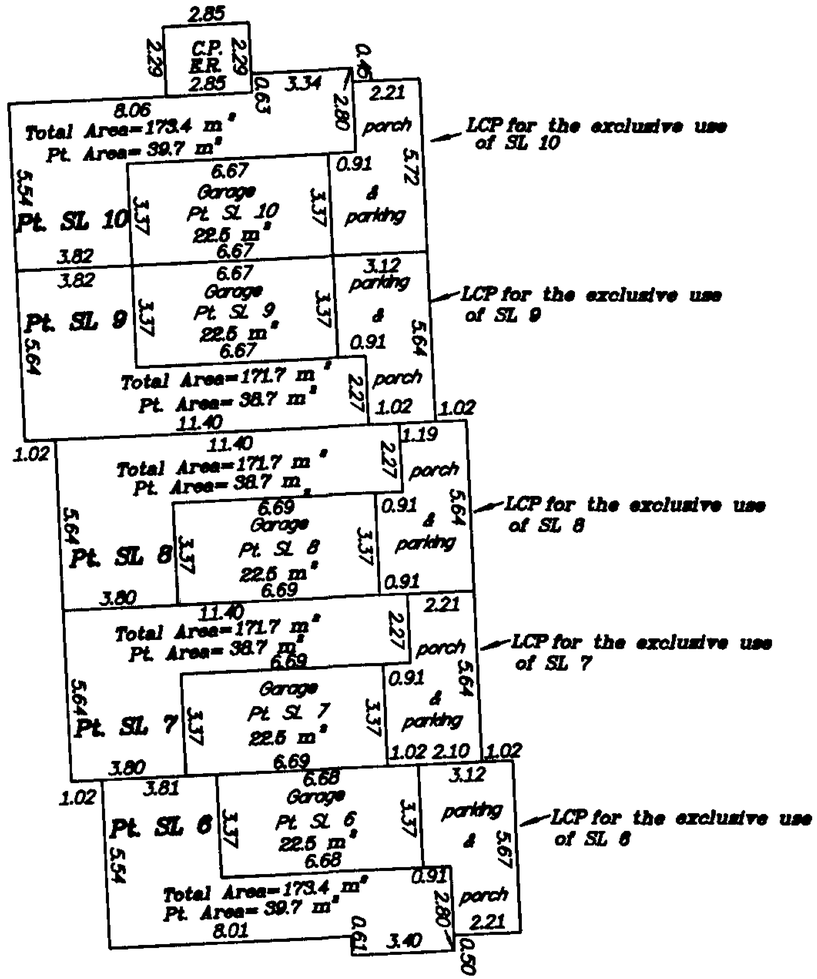

PHASE 2

G.W. LINDBERG LAND SURVEYING INC.
Professional Land Surveyor
Surveying & Geomatics Services
9261 Chemainus Road
Chemainus, B.C. V0R 1K5 Tel. (250) 246-9393
Email gwlindberg@shaw.ca Fax (250) 246-9393

Gerald W. Lindberg, B.C.L.S.

June, 22, 2005.

File No. GWL03-168
Dwg: Phase 2-Sheet 4

SECOND FLOOR LEVEL

PHASE 2, SHEET 5 OF 6 SHEETS

STRATA PLAN VIS5635

Scale = 1:200

4 2 0 4 8 12 16 20

Metres

SL denotes Strata Lot.
CP denotes Common Property
LCP denotes Limited Common Property
ER denotes common property Electrical Room
All distances are in metres unless otherwise noted.

All balconies and decks are defined as to height by the centre of the floor above or its extensions, or where there is no floor above, by the average height of the Strata Lot within the same building, unless otherwise indicated.

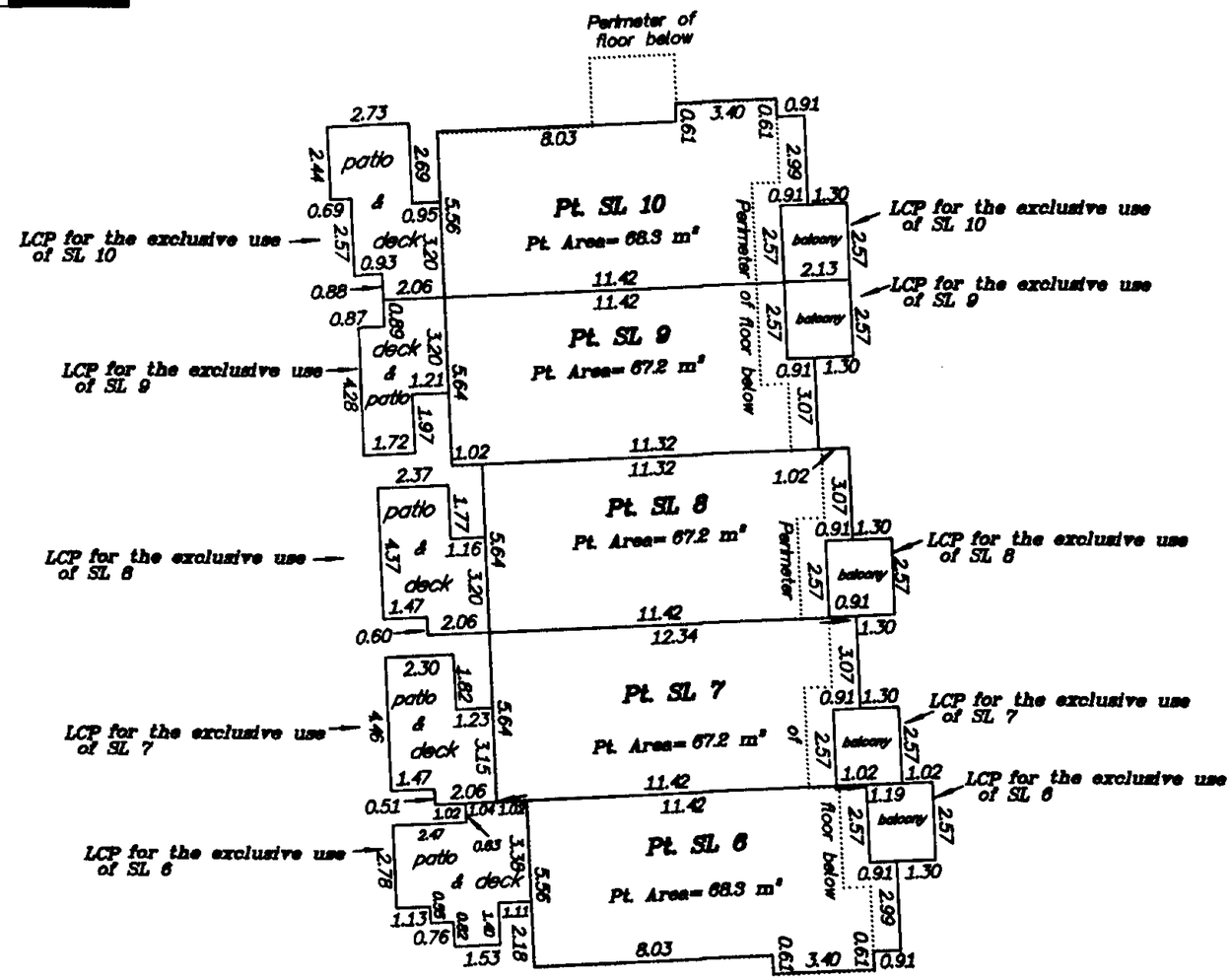

PHASE 2

G.W. LINDBERG LAND SURVEYING INC.
Professional Land Surveyor
Surveying & Geomatics Services
9261 Chemainus Road
Chemainus, B.C. V0R 1K5 Tel. (250) 246-9393
Email gwlindberg@shaw.ca Fax (250) 246-9393

Gerald W. Lindberg, B.C.L.S.

June, 22, 2005.

File No. GWL03-168
Dwg: Phase 2-Sheet 5

THIRD FLOOR LEVEL

PHASE 2, SHEET 6 OF 6 SHEETS

STRATA PLAN VIS5635

Scale = 1:200

4 2 0 4 8 12 16 20

Metres

SL denotes Strata Lot.
CP denotes Common Property
LCP denotes Limited Common Property
ER denotes common property Electrical Room
All distances are in metres unless otherwise noted.

All balconies and decks are defined as to height by the centre of the floor above or its extensions, or where there is no floor above, by the average height of the Strata Lot within the same building, unless otherwise indicated.

Note A :
Boundary defined by edge of landings and hallways

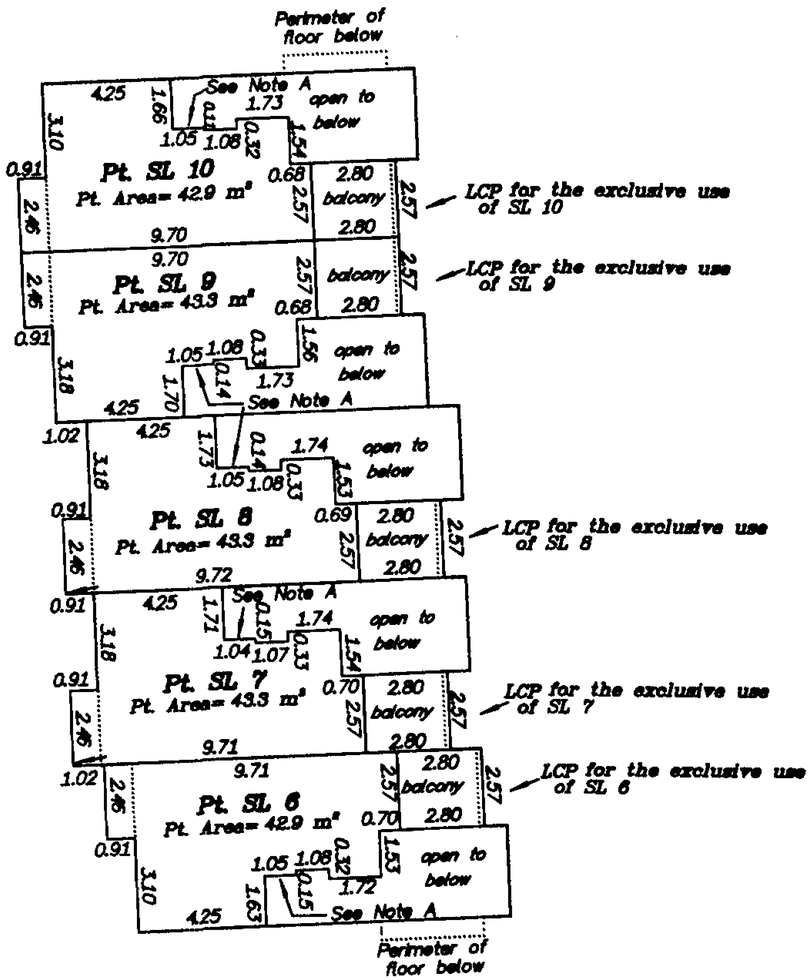

PHASE 2

Gerald W. Lindberg, B.C.L.S.

June, 22, 2005.

File No. GWL03-168
Dwg: Phase 2-Sheet 6

STRATA PLAN OF THE REMAINDER OF LOT A, SECTION 3, RANGE 3 EAST, NORTH SALT SPRING ISLAND, COWICHAN DISTRICT, PLAN VIP59981.

PHASE 3, SHEET 1 OF 6 SHEETS

STRATA PLAN VIS5635

Deposited and registered in the Land Title Office at Victoria, B.C., this 3 day of April, 2006.

M. Frantzen Per: tm
Deputy Registrar

This plan lies within the Capital Regional District.

FA40793

CAPITAL ASSESSMENT AUTHORITY
B.C.G.S. 92B.083
Scale = 1:500

10 5 0 10 20
Metres

LEGEND

Bearings are astronomic, derived from Plan VIS5635.

- ○ denotes standard iron post placed.
- ● denotes standard iron post found.
- ◙ denotes non-standard round iron post found.

Wt. denotes witness
S.L. denotes Strata Lot.
(CP) denotes Common Property
(LCP) denotes Limited Common Property

Unless otherwise indicated, bearings deflect by multiples of 45° from the given reference bearing.

All balconies and decks are defined as to height by the centre of the floor above or its extensions, or where there is no floor above, by the average height of the Strata Lot within the same building, unless otherwise indicated.

All distances are in metres unless otherwise noted.

I, Gerald W. Lindberg, a British Columbia land surveyor, certify that the building shown on this strata plan are within the external boundaries of the land that is the subject of the strata plan. Date: December 23, 2005.

Gerald W. Lindberg, B.C.L.S.

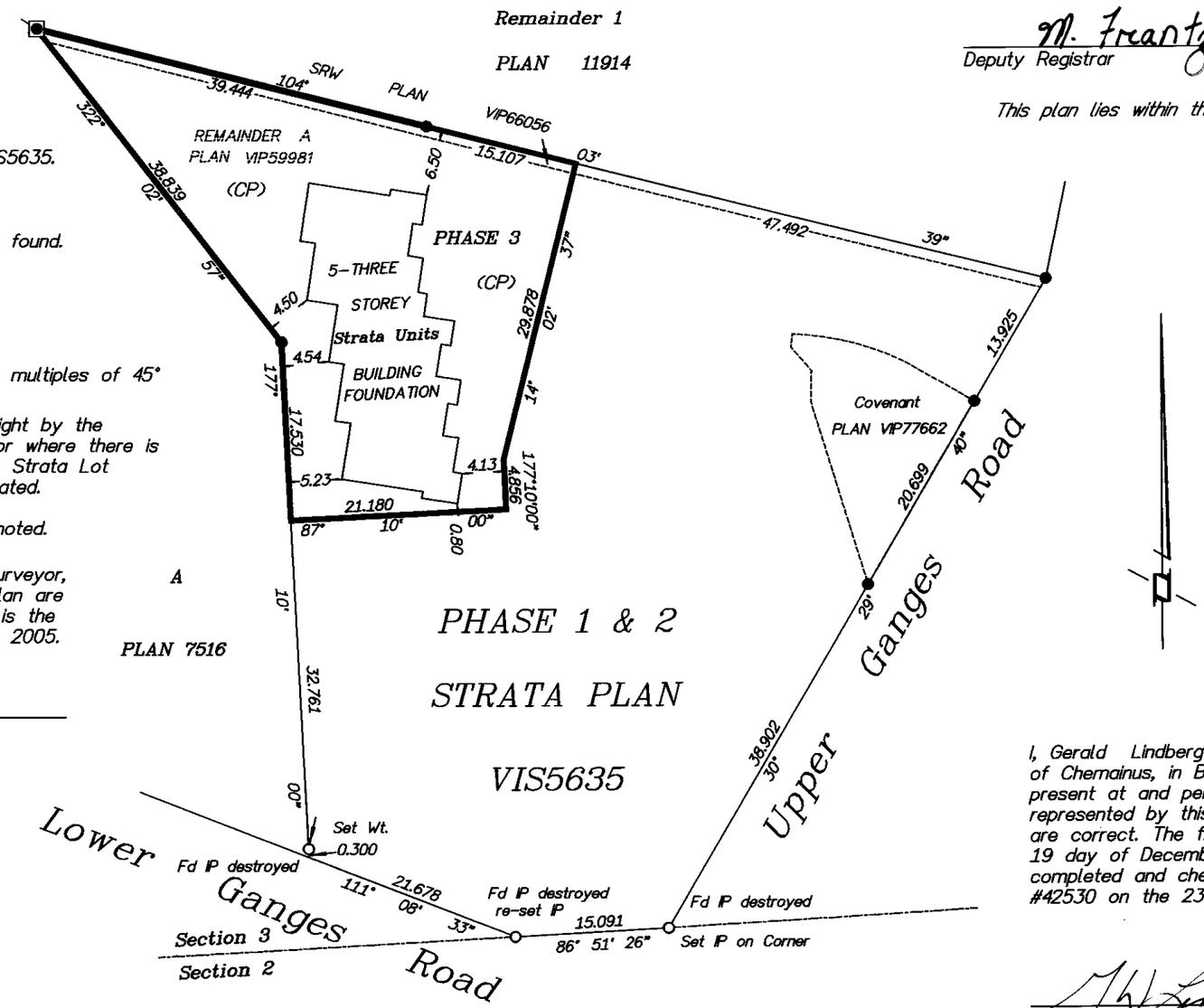

Civic Address:
115 Upper Ganges Road
Salt Spring Island, B.C.
V8K 2S2

I, Gerald Lindberg, a British Columbia Land Surveyor, of Chemainus, in British Columbia, certify that I was present at and personally superintended the survey represented by this plan, and that the survey and plan are correct. The field survey was completed on the 19 day of December, 2005. The plan was completed and checked, and the checklist filed under #42530 on the 23 day of December, 2005.

Gerald W. Lindberg, B.C.L.S.

G.W. LINDBERG LAND SURVEYING INC.
Professional Land Surveyor
Surveying & Geomatics Services
9261 Chemainus Road
Chemainus, B.C. V0R 1K5 Tel. (250) 246-9393
Email gwlindberg@shaw.ca Fax (250) 246-9393

Original File No. GWL03-168
Dwg: Phase 3-Sheet 1

22939
23053

BUILDING PERIMETER

Scale = 1:200

PHASE 3, SHEET 2 OF 6 SHEETS

STRATA PLAN VIS5635

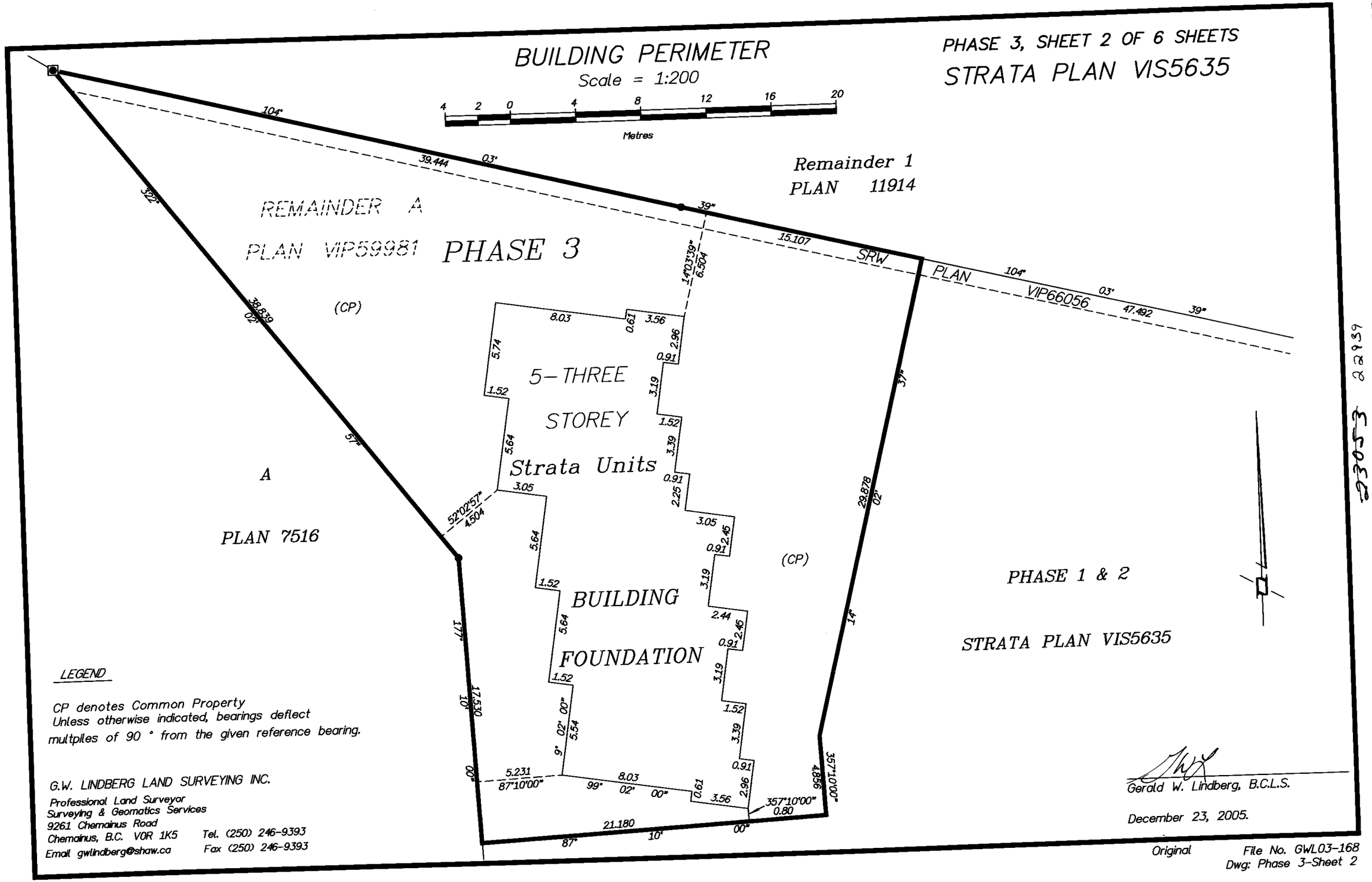

LEGEND

CP denotes Common Property
Unless otherwise indicated, bearings deflect multpiles of 90 ° from the given reference bearing.

G.W. LINDBERG LAND SURVEYING INC.
Professional Land Surveyor
Surveying & Geomatics Services
9261 Chemainus Road
Chemainus, B.C. V0R 1K5 Tel. (250) 246-9393
Email gwlindberg@shaw.ca Fax (250) 246-9393

Gerald W. Lindberg, B.C.L.S.

December 23, 2005.

Original File No. GWL03-168
Dwg: Phase 3-Sheet 2

PHASE 3, SHEET 3 OF 6 SHEETS

STRATA PLAN VIS5635

FORM S ENDORSEMENT OF NONOCCUPANCY

I, Gerald W. Lindberg, a British Columbia land surveyor, certify that the building included in this strata plan has not, as of December 23 , 2005 been previously occupied.

Gerald W. Lindberg, B.C.L.S.

FORM Q ENDORSEMENT OF APPROVAL FOR PHASED STRATA PLAN

Approved as Phase 3 of a 3 Phase Strata Plan under Section 224 of the Strata Property Act .

Date : March 13, 2006

Signature of Approving Officer
Ministry of Transportation

Registered Owners:

Springbay Developments Inc.
Inc. no. 569988

Authorized Signatory
(Print name here WAYNE LEE)

Authorized Signatory
(Print name here)

Witness as to signatures
(Print name here DAVID ADAMS)

SOLICITOR
Occupation of Witness

402 - 707 FORT ST. VICTORIA BC.
Address of Witness

Gerald W. Lindberg, B.C.L.S.

December 23, 2005.

G.W. LINDBERG LAND SURVEYING INC.
Professional Land Surveyor
Surveying & Geomatics Services
9261 Chemainus Road
Chemainus, B.C. V0R 1K5 Tel. (250) 246-9393
Email gwlindberg@shaw.ca Fax (250) 246-9393

2305 3

Original File No. GWL03-168
Dwg: Phase 3-Sheet 3

FIRST FLOOR LEVEL

PHASE 3, SHEET 4 OF 6 SHEETS

STRATA PLAN VIS5635

Scale = 1:200

4 2 0 4 8 12 16 20

Metres

LEGEND

SL denotes Strata Lot.
CP denotes Common Property
LCP denotes Limited Common Property

All distances are in metres unless otherwise noted.

All balconies and decks are defined as to height by the centre of the floor above or its extensions, or where there is no floor above, by the average height of the Strata Lot within the same building, unless otherwise indicated.

PHASE 3

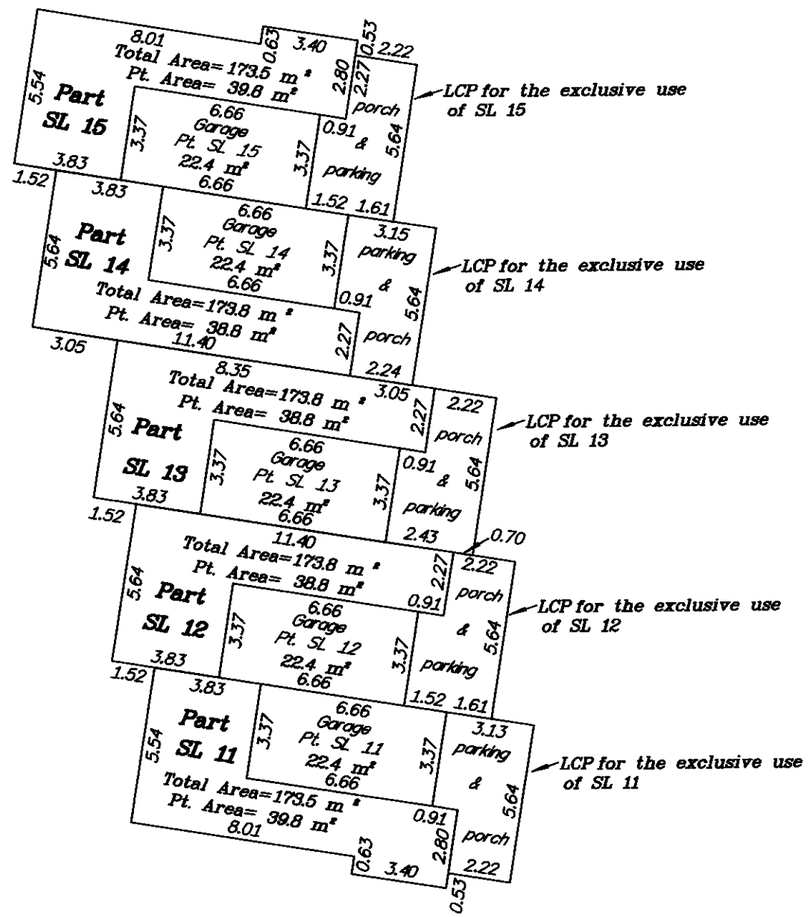

G.W. LINDBERG LAND SURVEYING INC.
Professional Land Surveyor
Surveying & Geomatics Services
9261 Chemainus Road
Chemainus, B.C. V0R 1K5 Tel. (250) 246-9393
Email gwlindberg@shaw.ca Fax (250) 246-9393

Gerald W. Lindberg, B.C.L.S.

December 23, 2005.

Original File No. GWL03-168
Dwg: Phase 3-Sheet 4

23053 22939

SECOND FLOOR LEVEL

PHASE 3, SHEET 5 OF 6 SHEETS

STRATA PLAN VIS5635

Scale = 1:200

4 2 0 4 8 12 16 20

Metres

LEGEND

SL denotes Strata Lot.
CP denotes Common Property
LCP denotes Limited Common Property

All distances are in metres unless otherwise noted.

All balconies and decks are defined as to height by the centre of the floor above or its extensions, or where there is no floor above, by the average height of the Strata Lot within the same building, unless otherwise indicated.

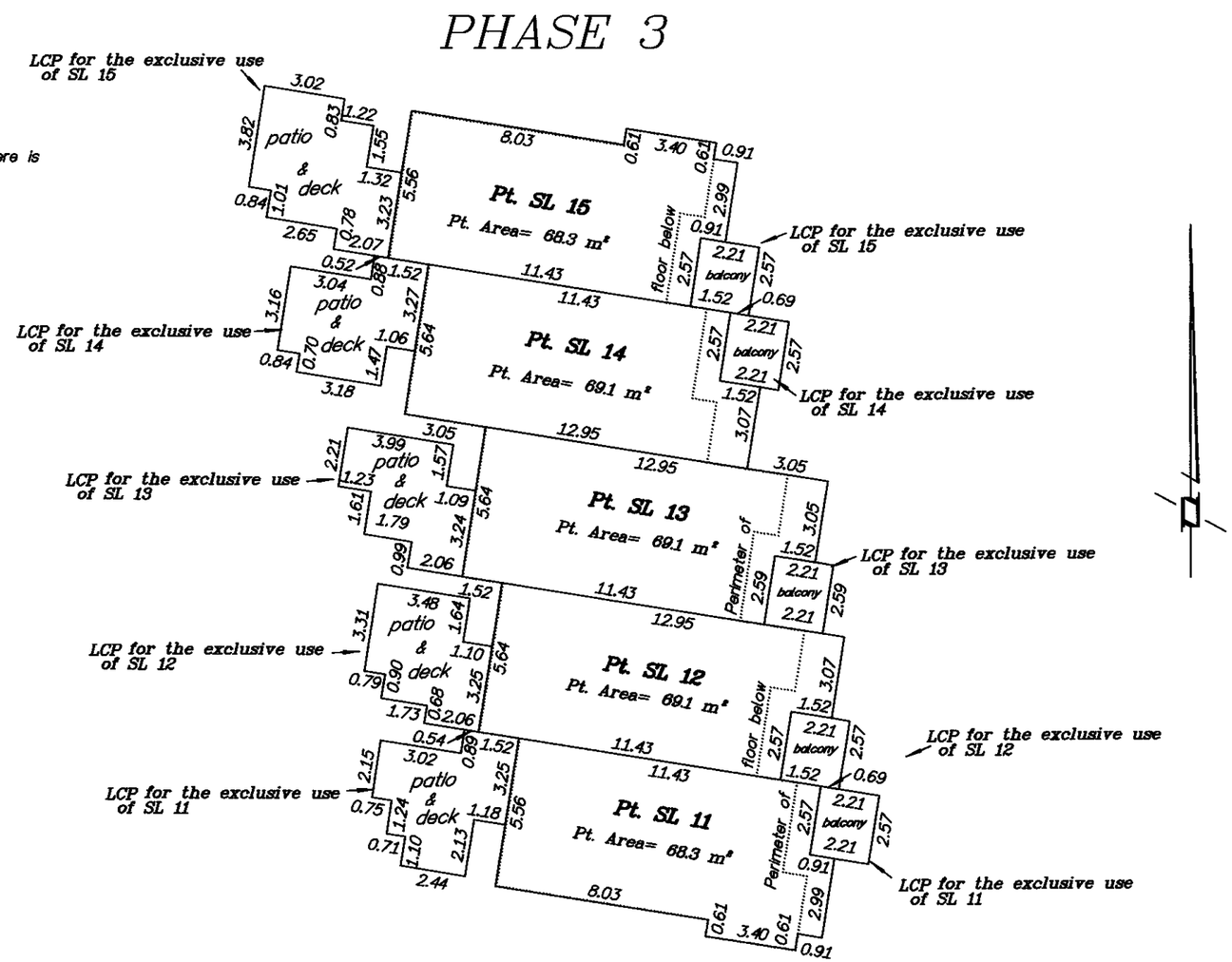

G.W. LINDBERG LAND SURVEYING INC.
Professional Land Surveyor
Surveying & Geomatics Services
9261 Chemainus Road
Chemainus, B.C. V0R 1K5 Tel. (250) 246-9393
Email gwlindberg@shaw.ca Fax (250) 246-9393

Gerald W. Lindberg, B.C.L.S.

December 23, 2005.

23053 22939

Original File No. GWL03-168
Dwg: Phase 3-Sheet 5

THIRD FLOOR LEVEL

PHASE 3, SHEET 6 OF 6 SHEETS

STRATA PLAN VIS5635

Scale = 1:200

4 2 0 4 8 12 16 20

Metres

LEGEND

SL denotes Strata Lot.
CP denotes Common Property
LCP denotes Limited Common Property

All distances are in metres unless otherwise noted.

All balconies and decks are defined as to height by the centre of the floor above or its extensions, or where there is no floor above, by the average height of the Strata Lot within the same building, unless otherwise indicated.

Note A :
Boundary defined by edge of landings and hallways

PHASE 3

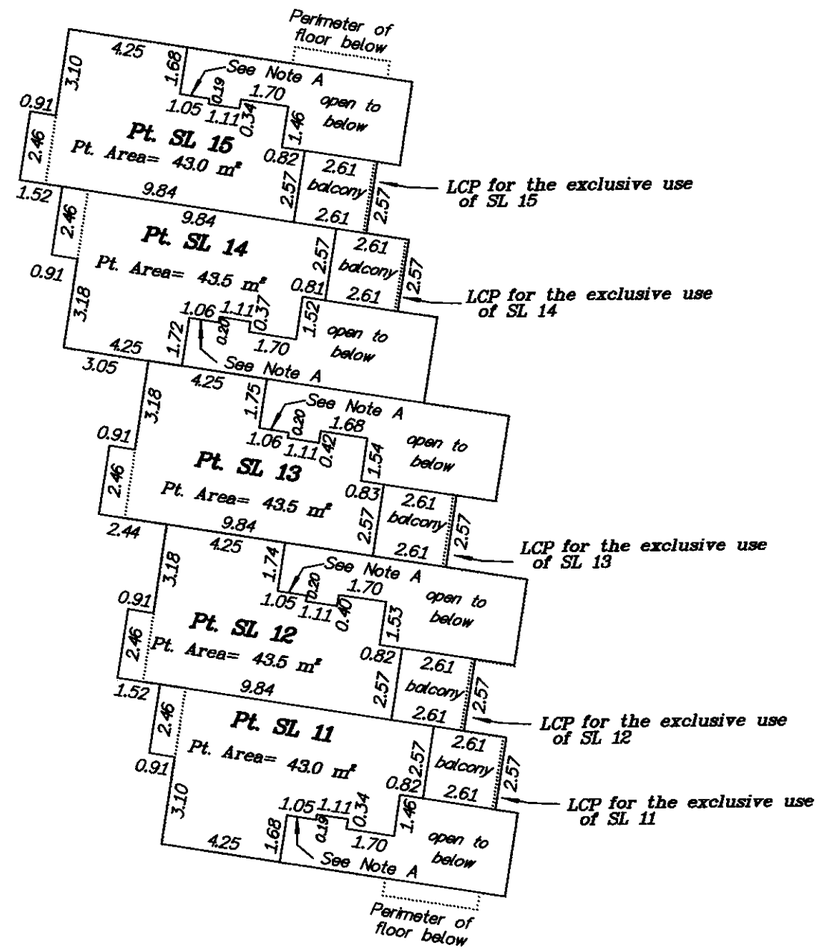

G.W. LINDBERG LAND SURVEYING INC.
Professional Land Surveyor
Surveying & Geomatics Services
9261 Chemainus Road
Chemainus, B.C. V0R 1K5 Tel. (250) 246-9393
Email gwlindberg@shaw.ca Fax (250) 246-9393

Gerald W. Lindberg, B.C.L.S.

December 23, 2005.

Original

File No. GWL03-168
Dwg: Phase 3-Sheet 6